Wall mount SYS1621-W2E series 30-60W

Sunny — Your only power source

Country of Origin :	*China*
Operating Temperature :	*0~40 [°C]*
Dimension :	*58 × 58 × 28 [mm] (for 30W model)* *65 × 65 × 28[mm] (for 45&60W models)*
Efficiency level (ErP) :	VI
GREEN MODE	**RoHS**

CE

Specifications

Model	Voltage DC/Loading	Max. Power	Ripple / Noise	Connector
SYS1621-Type C 30	**5V/3A, 9V/3A, 12V/2.5A, 15V/2A, 20V/1.5A**	**30**	**150**	**USB-C**
SYS1621-Type C 45	**5V/3A, 9V/3A, 12V/3A, 15V/3A, 20V/2.2A**	**45**	**150**	**USB-C**
SYS1621-Type C 60	**5V/3A, 9V/3A, 12V/3A, 15V/3A, 20V/3A**	**60**	**200**	**USB-C**

Features:

PSU housing ready for use in country: Wxx = W2E - Europe
Output connector: Regulated Output With Low Ripple Noise | Safety Agency Requirements and EMI/EMS Certified
Private Label Marking Available | Modified and Custom Design Available | 2 Years Warranty | Power delivery

OUTPUT	
Turn delay	5000 ms max @ AC low line input@output full load
Hold up time	10ms min@AC nominal input@output full load (>half cycle)
Efficiency (Normal)	Meet CEC,DOE,ERP,MEPS Level
Transient response (dv,tmax)	0.4v dv max At AC nominal input loading from 50% load to 16ms tmax | Dynamic rise time 10uS max , duty 40mS max , Dynamic load step is slew rate of 0.5A/uS
Power out.Limit	30-60W based on the model
Burn in limit	Full load 2 Hours
Power consumption	0.075W for Type C 30W and 45W 0.15W for Type C 60W
Output regulation	Auto-detect the charging voltage and current for Type C and iOS devices. Meet PD3.0,QC 3.0 requirements rules
INPUT	
Voltage	(90~264)VAC
Frequency	(47~63)hz
Current	1.5A rms @ AC low line input and DC output full load
Inrush Surge Current (cold start)	40/60A max@power supply cold start,ambient temperature 25°C @115Vac/230Vac nominal AC input
leakage current	0.25mA Max
PROTECTION	
Over current/ Short protection	The power supply will self-protect any output to ground & auto recovery when abnormal circuit faults remove. An output short circuit is defined as any output impedance less than 0.1
Over Voltage	The power supply will be auto recovered when faults remove
Input protection	F1 2A/250V Fuse The power supply shall be protected
No Load protection	The power supply is provided with no load operation to
Protection class	II

CE	
EMC	2014/30/EU
LVD	2014/35/EU EN 62368-1:2014+A11:2017
SAFETY	
CE	
OTHERS	
Dielectric Strength(Hi-pot)	Primary to Secondary:3000VAC 10mA/60S
M.T.B.F	500,000 Calculated Hours at 25ºC, by Telcordia SR-332
DC output	Type C
PLD (power line disturbance)	Line power surge | Line voltage SAG-more info on request
Cooling method	Natural Convection Cooling
Housing material	PC
Temperature coefficient:	<±0.5%/°C
ENVIRONMENT	
Temperature	Operating: 0~40°C / Storage: -20~85°C
Humidity	Operating: 8%~90%RH / Storage: 5%~95% RH non condensing
WEIGHT	
NW: 150g/pc	
GW: 16kg/box	
PACKING	
PE plastic bag	100 pcs /1 box

Mechanical case specification:

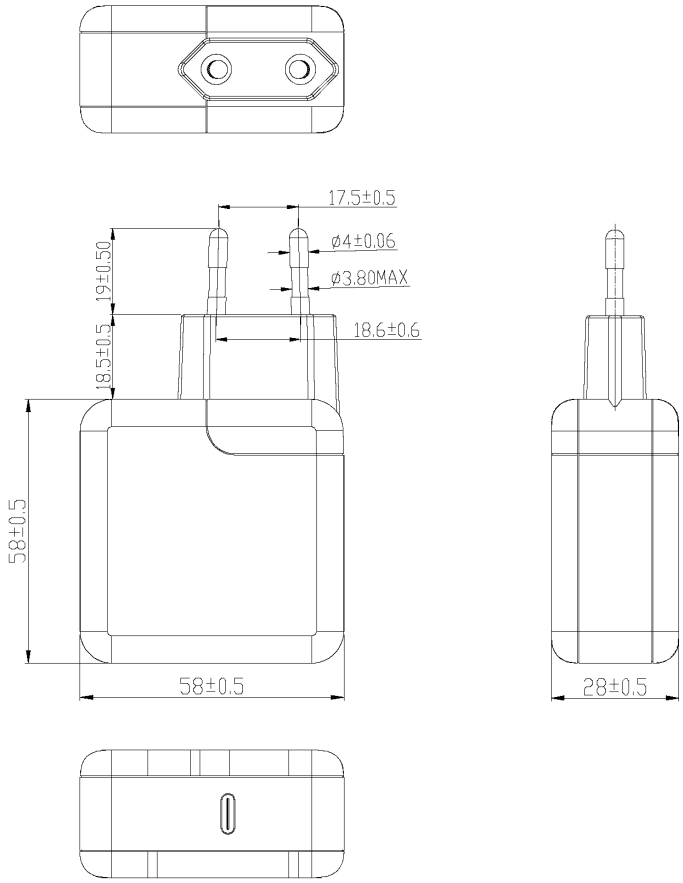

58 × 58 × 28 [mm] (for 30W model)

65 × 65 × 28 [mm] (for 45&60W models)