Desktop SYS1319-T3 series 30W

GREEN MODE **RoHS**

Country of Origin : *China*

Operating Temperature : *0~40 [°C]*

Dimension : *86.8 x 47.3 x 32.3 [mm]*

Suitable AC cable: *IEC320-C13*

Efficiency level (ErP) : V

Approvals / Marks :

Features:	
Wide range Input (90 ~ 264)VAC / (47 ~ 63) Hz.	For I.T.E. use only + RoHS conform.
Over load, over voltage & short protection.	Designed and certified also for cable IEC320-C7 & inlet C8 (T2).
Output connector: standard: 2.1 x 5.5 x 11mm or customer requirement.	

Specification:

	Model	Voltage DC [V]	Loading [A]	Tol. [%]	OCP [A]	OVP Max [V]	Efficiency [%]	Max. Power [W]	Ripple & Noise [mV]p-p	Connector UL approved [mm]
ErP V.	**SYS1319-3015-T3**	**15**	**0~2.00**	**±5**	**2.5~6.5**	**25**	**>80.6**	**30**	**150**	**2.1x5.5x11**
	SYS1319-3024-T3	**24**	**0~1.25**	**±5**	**1.5~5.5**	**25**	**>84.0**	**30**	**240**	**2.1x5.5x11**

OEM Production	This model is certified for Uout=(5,6,9,12,15,16,18,19,20,24)V and Pout=(5~30)W is rising in steps of 1W	
INPUT	Voltage	(90 ~ 264) VAC
	Frequency	(47 ~ 63) Hz
	Current	1A rms@ AC low line input and DC output full load
	Surge Current max.	40/60Amax. @ power supply cold start, ambient temperature 25°C @115Vac/230Vac nominal AC input.
	Leakage current	3.5mA Max.
PROTECTION	Over load OCP	> 120% Fold back
	Over Voltage OVP	> 105% Voltage limiting
	Short Circuit	Yes, Output to Ground, Auto recovery when fault has been removed. Short Current & Over Current can not exceed
		8A max. after 1minute at nominal line input.
	Protection class	I.
	No Load Operation	Yes, to protect the power supply and system from damage
OTHERS	Dielectric Strength	I/P-O/P (FG): 3KVAC / 10mA / 1 min
	Power ON Led	Yes
	Turn on delay	3000 ms max. @ AC low line input @ output full load
	Hold-up Time	10ms @ AC nominal Input and Output full load
	MTBF Qualification	500,000 Calculated Hours at 25ºC, by Telcordia SR-332
	DC cable & connector	Standard length of the cable 1,8m & It depends on customer requirements and upon specifications
	Efficiency (typical)	>83.5% @ 240VAC input & Full load
	Power Consumption	Max. 0.3Wrms @ AC nominal Input and Output min. load | some models have achieved efficiency level IV.
	Input Fuse	250VAC / 1.6A protected against power line surges and any abnormal conditions
ENVIRONMENT	Temperature	Operating: (0 ~ 40)°C / Storage: (-20 ~ 85)°C
	Humidity	Operating: (8 ~ 90)% RH / Storage: (5 ~ 95)% RH non condensing
SAFETY	CE | TUV/GS | CB | cULus | KC (Only for SYS1319-3012, SYS1319-3015) | FCC	
CE	**EMC**	2014/30/EU
	LVD	2014/35/EU EN 60950-1:2006+A11+A1+A12+A2
WEIGHT	1pc	N.W.: 200g / pc
		0.48 x 0.26 x 0.44 [m]
PACKING	Box	60 pcs / 1box
		G.W.: 15kg / box

Mechanical case specification:

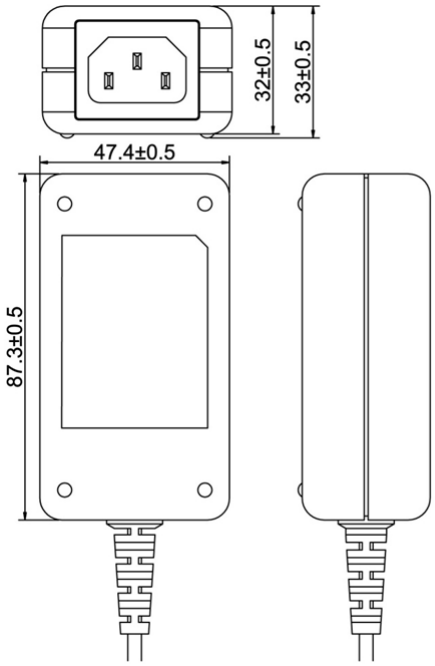

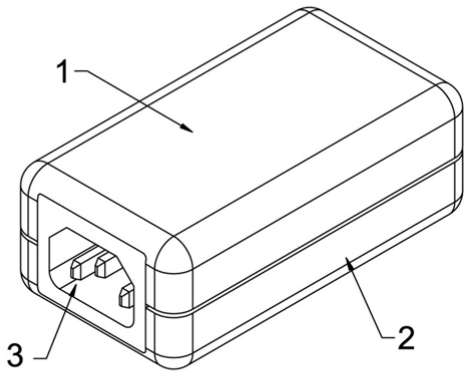

3 socket
2 BOTTOM
1 TOP

Cable specification:
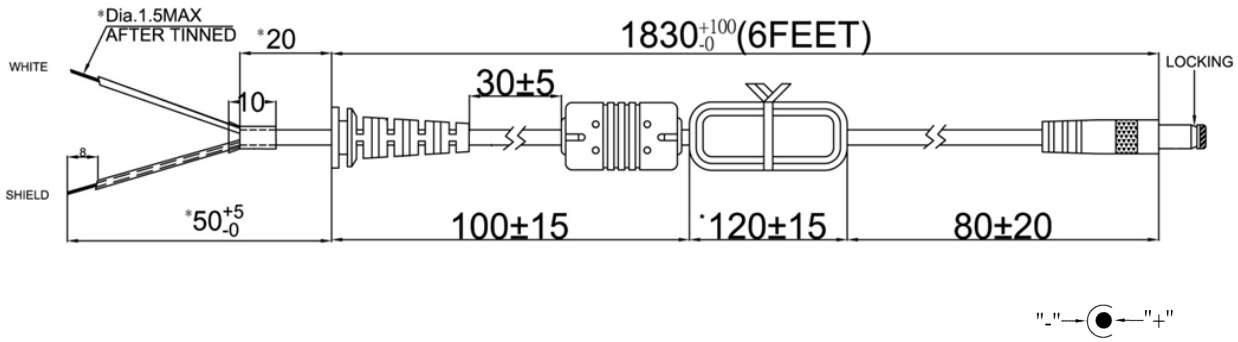
1185#18*1C + shield / 6FT (1830mm)